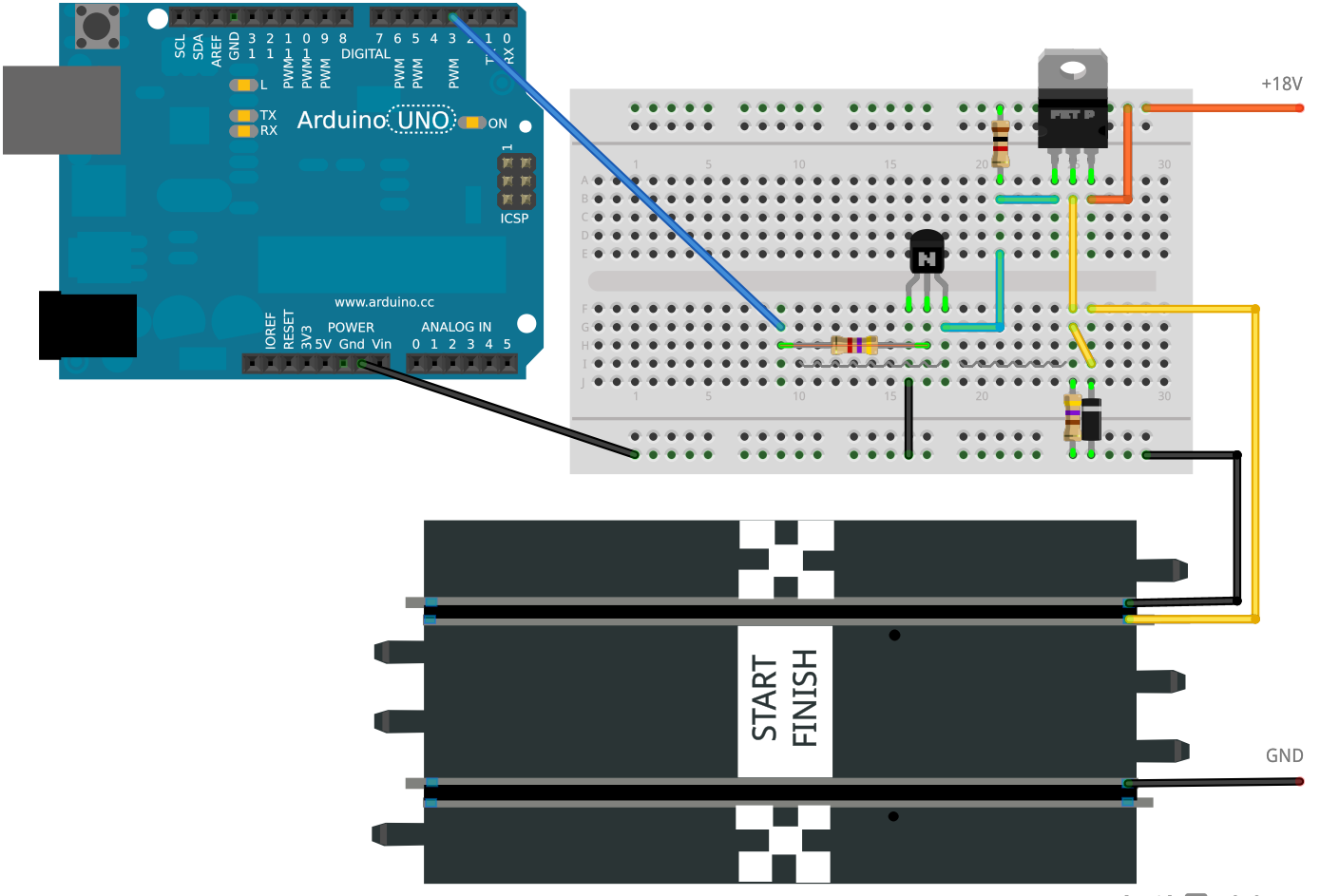

Made with Fritzing.org